Hytera

DIGITAL PORTABLE RADIO

数字手持终端

BD352i OWNER'S MANUAL

BD352i 使用说明书

Welcome to the world of Hytera and thank you for purchasing this product. This manual includes a description of the functions and step-by-step procedures for use. It also includes a troubleshooting guide. To avoid bodily injury or property loss caused by incorrect operation, please carefully read the *Safety Information Booklet* before use.

This manual is applicable to the following product:

BD352i Digital Portable Radio

DIGITAL PORTABLE RADIO

Copyright Information

Hytera is the trademark or registered trademark of Hytera Communications Corporation Limited (the Company) in the People's Republic of China (PRC) and/or other countries or areas. The Company retains the ownership of its trademarks and product names. All other trademarks and/or product names that may be used in this manual are properties of their respective owners.

The product described in this manual may include the Company's computer programs stored in memory or other media. Laws in PRC and/or other countries or areas protect the exclusive rights of the Company with respect to its computer programs. The purchase of this product shall not be deemed to grant, either directly or by implication, any rights to the purchaser regarding the Company's computer programs. The Company's computer programs may not be copied, modified, distributed, decompiled, or reverse-engineered in any manner without the prior written consent of the Company.

Disclaimer

The Company endeavors to achieve the accuracy and completeness of this manual, but no warranty of accuracy or reliability is given. All the specifications and designs are subject to change without notice due to continuous technological development. No part of this manual may be copied, modified, translated, or distributed in any manner without the prior written consent of the Company.

We do not guarantee, for any particular purpose, the accuracy, validity, timeliness, legitimacy or completeness of the third-party products and contents involved in this manual.

If you have any suggestions or would like to receive more information, please visit our website at: http://www.hytera.com.

FCC Statement

This equipment has been tested and found to comply with the limits for a Class B digital device, pursuant to part 15 of FCC Rules. These limits are designed to provide reasonable protection against harmful interference in a residential installation. This equipment generates and can radiate radio frequency energy. If not installed and used in accordance with the instructions, it may cause harmful interference to radio communications. However, there is no guarantee that interference will not occur in a particular installation. Verification of harmful interference by this equipment to radio or television reception can be determined by turning it off and then on. The user is encouraged to try to correct the interference by one or more of the following measures:

- Reorient or relocate the receiving antenna. Increase the separation between the equipment and receiver.
- Connect the equipment into an outlet on a different circuit to that of the receiver's outlet.
- Consult the dealer or an experienced radio/TV technician for help.

Operation is subject to the following two conditions:

- This device may not cause harmful interference.
- This device must accept any interference received, including interference that may cause undesired operation.

Note: Changes or modifications to this unit not expressly approved by the party responsible for compliance could void the user's authority to operate the equipment.

Compliance with RF Exposure Standards

Hytera's portable radio complies with the following RF energy exposure standards and guidelines:

- United States Federal Communications Commission, Code of Federal Regulations; 47 CFR § 1.1307, 1.1310 and 2.1093.
- American National Standards Institute (ANSI) / Institute of Electrical and Electronic Engineers (IEEE) C95. 1:2005; Canada RSS102 Issue 5 March 2015.
- Institute of Electrical and Electronic Engineers (IEEE) C95.1:2005 Edition

RF Exposure Compliance and Control Guidelines and Operating Instructions

To control your exposure and ensure compliance with the occupational/controlled environmental exposure limits, always adhere to the following procedures.

Guidelines:

- Do not remove the RF Exposure Label from the device.
- User awareness instructions should accompany device when transferred to other users.
- Do not use this device if the operational requirements described herein are not met.

Operating Instructions:

- Transmit no more than the rated duty factor of 50% of the time. To transmit (talk), push the **Push-To-Talk** (**PTT**) button. To receive calls, release the **PTT** button. Transmitting 50% of the time, or less, is important because the radio generates measurable RF energy only when transmitting (in terms of measuring for standards compliance).
- Keep the radio unit at least 2.5 cm away from the face. Keeping the radio at the proper distance is important as RF exposure decreases with distance from the antenna. The antenna should be kept away from the face and eyes.
- When worn on the body, always place the radio in a Hytera-approved holder, holster, case, or body harness or by use of the correct clip for this product. Use of non-approved accessories may result in exposure levels which exceed the FCC's occupational/controlled environmental RF exposure limits.
- Use of non-approved antennas, batteries, and accessories causes the radio to exceed the FCC RF exposure guidelines.
- Contact your local dealer for the product's optional accessories.

IC Statement

The device has been tested and complies with SAR limits, users can obtain Canadian information on RF exposure and compliance

Après examen de ce matériel aux conformité aux limites DAS et/ou aux limites d'intensité de champ RF, les utilisateurs peuvent sur l'exposition aux radiofréquences et la conformité and compliance d'acquérir les informations correspondantes

This device complies with Industry Canada license-exempt RSS standard(s). Operation is subject to the following two conditions:

- This device may not cause harmful interference.
- This device must accept any interference received, including interference that may cause undesired operation.

Le présent appareil est conforme aux CNR d'Industrie Canada applicables aux appareils radio exempts de licence. L'exploitation est autorisée aux deux conditions suivantes: (1) l'appareil ne doit pas produire de brouillage, et (2) l'utilisateur de l'appareil doit accepter tout brouillage radioélectrique subi, même si le brouillage est susceptible d'en compromettre le fonctionnement

EU Regulatory Conformance

As certified by the qualified laboratory, the product is in compliance with the essential requirements and other relevant provisions of the following directives: 1999/5/EC or 2014/53/EU, 2006/66/EC, 2011/65/EU, and 2012/19/EU.

Please note that the above information is applicable to EU countries only.

Contents

Packing List **2**
Product Overview **3**
Product Controls 3
LCD Icons 4
LED Indications 4
Before Use **4**
Attaching the Antenna 4
Attaching the Battery 4
Attaching the Belt Clip 5
Attaching the Audio Accessories 5
Charging the Battery 5
Checking the Battery Power 5
Basic Operations **6**
Call Services **6**
Call on Digital Channel 6
Call on Analog Channel (Without Signaling) 6
Optional Features **7**
Troubleshooting **9**
Care and Cleaning **11**
Product Care 11
Product Cleaning 11
Optional Accessories **11**

Packing List

Please unpack carefully and check that all items listed below are received. If any item is missing or damaged, please contact your dealer.

Item	Quantity (PCS)	Item	Quantity (PCS)
Radio	1	Belt Clip	1
Battery	1	Strap	1
Power Adapter	1	Documentation Kit	1
Antenna	1	/	/

Note

Check whether the frequency band marked on the antenna label matches that on the radio label. If not, please contact your dealer.

Product Overview

Product Controls

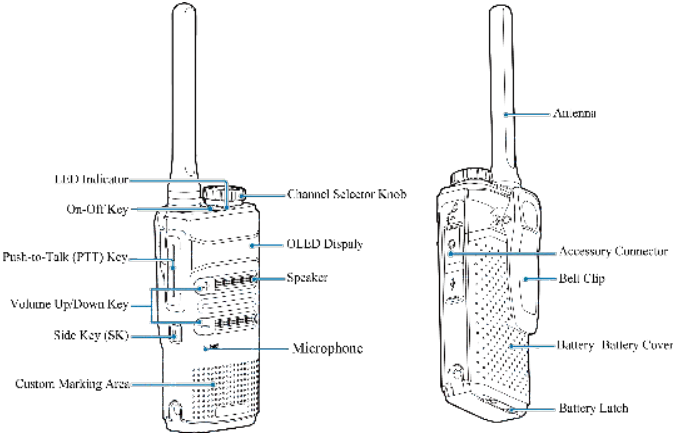

Note

You can request your dealer to program your radio to use the **SK** as the shortcut to a radio feature.

LCD Icons

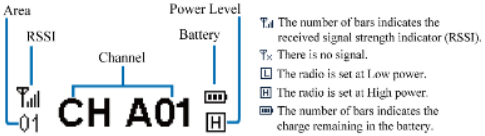

LED Indications

LED Indicator	Radio Status
Flashes green	Being turned on.
Glows green	Receiving.
Glows red	Transmitting.
Flashes orange slowly	Scanning.
Glows orange	Call hang time: No voice is being transmitted or received on the channel during a call. Within such a period, you can press and hold the **PTT** key and speak.

Before Use

Attaching the Antenna

1. Place the antenna in its receptacle.
2. Rotate the antenna clockwise until hand tight.

Caution

Do not hold the radio by the antenna, as it may reduce the radio performance and life span of the antenna.

Attaching the Battery

1. Slide the battery latch to the unlock position, and remove the battery cover.
2. Align the battery contacts with the contacts in the battery compartment, and press the battery into place.
3. Insert the protrusions at the top of the battery cover into the radio, and press the cover into place.
4. Slide the battery latch to the lock position.

Note

To remove the battery, make sure the radio is turned off, remove the battery cover, and lift the bottom of the battery.

Attaching the Belt Clip

1. Use a Phillips screwdriver to turn the screws counterclockwise on the back of the radio and remove them.
2. Align the screw holes on the belt clip with those on the back of the radio.
3. Put the screws back in place, and use the Phillips screwdriver to turn them clockwise until hand tight.

Attaching the Audio Accessories

1. Open the accessory connector cover.
2. Plug the accessory into the accessory connector.
3. Rotate the accessory plug clockwise into place.

Charging the Battery

Caution

- Use the charger specified by Hytera to charge the battery.
- Read the Safety Information Booklet before charging.

The battery delivered with the radio is uncharged. To ensure optimum performance, fully charge the battery before initial use. It is recommended that your radio remain powered off during charging.

To charge the battery, do as follows:

1. Insert the USB connector of the power adapter into the USB port of the radio.
2. Plug the power adapter into a power outlet, and then switch the power outlet on.

Checking the Battery Power

To check the current battery power, press and hold the **Battery Power Indicator** key preprogrammed by your dealer. The following table lists battery power indications. The icon indicates that the battery runs low. In this case, please recharge or replace the battery

LED Indicator	Alert Tone	Battery Power
Glows green	Three beeps	
Glows orange	Two beeps	
Glows red	One beep	
Flashes red	Low battery tone	

Basic Operations

If you want to…	Then…
Turn on/off the radio	Press the **On-Off** key.
Increase the volume	Press the **Volume Up** key.
Decrease the volume	Press the **Volume Down** key.
Select a channel	Rotate the **Channel Selector** knob.

Call Services

Call on Digital Channel

You can initiate a call to or receive a call from the private or group contact preset for a digital channel.

Initiating a Call

1. Select the required channel.
2. Hold the radio vertically 2.5 to 5 cm from your mouth.
3. Press and hold the **PTT** key, and then speak into the microphone.

The radio displays for an outgoing group call and for an outgoing private call.

Receiving and Responding to a Call

When receiving a call, you can listen to it without any operation. The radio displays for an incoming group call and for an incoming private call.

You can press and hold the **PTT** key and speak within the preset time period.

Call on Analog Channel (Without Signaling)

You can initial a call to or receive calls from all other users on an analog channel. The operations are the same as those on a digital channel.

Optional Features

The following features need to be programmed by your dealer. Please contact your dealer for detailed operations.

Type	Feature	Description
General Feature	Zone	Allows you to select a zone. The radio supports up to 16 zones, with a maximum of 256 channels per zone.
	Power Level	Allows you to switch the transmit power level between high and low.
	Scan	Allows the radio to scan all channels in the scan list preset for the current channel and stay on a channel with activities.
	Emergency Alarm	Allows you to initiate an emergency alarm or call to ask for help in case of emergencies.
	Busy Channel Lockout	Prevents the radio from transmitting on a busy channel.
	Time-out Timer (TOT)	Terminates transmission when the preset time period expires.
	Keypad Lock	Allows the keypad to be locked automatically when the radio does not detect any activity or operation within the preset period.
	Battery Save	Allows the radio to automatically enter the battery save mode when it does not detect any activity or operation within the preset period.
Digital Feature	All Call	Allows you to initiate a call to all users on a digital channel.
	One Touch Call	Allows you to press one key to call the predefined private or group contact.
	TDMA Direct Mode	Allows the radio to operate on a channel with two time slots.

Type	Feature	Description
Analog Feature	Squelch Off	Allows the radio's speaker to always keep unmuted.
	Squelch Off Momentary	Allows the radio's speaker to keep unmuted when you press and hold the preprogrammed key.
	Squelch Level	Allows you to adjust the squelch threshold required for the radio to unmute.
	Monitor	Allows the radio to monitor activities on the channel.
	Scrambler	Allows you to encrypt the transmitted voice to prevent eavesdropping.
	CTCSS/CDCSS	Allows you to prevent unwanted calls on the same frequency.

Troubleshooting

Phenomena	Analysis	Solution
The radio cannot be turned on.	The battery may be installed improperly.	Remove and reattach the battery.
	The battery power may run out.	Recharge or replace the battery.
	The battery may suffer from poor contact caused by dirty or damaged battery contacts.	Clean the battery contacts or replace the battery.
During reception, the voice is weak, intermittent or totally inactive.	The battery voltage may be low.	Recharge or replace the battery.
	The volume level may be low.	Increase the volume.
	The antenna may be loose or may be installed incorrectly.	Turn off the radio, and remove and reattach the antenna.
	The speaker may be blocked.	Clean the surface of the speaker.
You cannot communicate with other group members.	The frequency or signal strength may be low in comparison to other members.	Verify your TX/RX frequency and signal strength are correct.
	The channel type (digital or analog) may be set incorrectly.	Verify you are on the correct digital or analog channel.
	You may be too far away from other members.	Move towards other members.
Unknown voices or noise is heard on the channel.	You may be interrupted by radios using the same frequency.	Change the frequency, or adjust the squelch level.
	The radio in analog mode may be set with no signaling.	Set signaling for all radios operating at the same frequency to avoid interference.

Phenomena	Analysis	Solution
You are unable to hear anyone because of too much noise and hiss.	You may be too far away from other members.	Move towards other members.
	You may be located in an unfavorable position. For example, your communication may be blocked by high buildings or blocked in an underground area.	Move to an open and flat area, and restart the radio and try contacting again.
	It could be the result of external disturbance (such as electromagnetic interference).	Stay away from equipment that may cause interference.
The OLED does not display any information.	The OLED may fail to function temporarily.	Restart the radio.

If the above solutions cannot fix your problems, or you may have some other queries, please contact us or your local dealer for more technical support.

Care and Cleaning

To guarantee optimal performance as well as a long service life of the product, please follow these tips.

Product Care

- Do not pierce or scrape the product.
- Keep the product far away from substances that can corrode the circuitry.
- Do not hold the product by the antenna or earpiece cable.
- Close the accessory connector cover when no accessory is in use.

Product Cleaning

Caution

Turn off the product and remove the battery before cleaning.

- Clean up the dust and fine particles on the products surface and charging piece with a clean and dry lint-free cloth or a brush regularly
- Use neutral cleanser and a non-woven fabric to clean the keys, knobs and front case after long-time use. Do not use chemical preparations such as stain removers, alcohol, sprays or oil preparations, so as to avoid surface case damage.
- Make sure the product is completely dry before use.

Optional Accessories

Caution

Use the accessories specified by Hytera only; otherwise, the Company will not be liable for any loss or damage arising out of the use of any unauthorised accessories.

Contact your local dealer for the optional accessories used with the product.

非常感谢您对我们产品的青睐！本手册旨在让您快速掌握终端的使用。为了避免因不当操作而给您带来身体伤害或财产损失，请于使用终端前详细阅读《安全信息手册》。

本手册适用于以下机型：

BD352i数字手持终端

数字手持终端

版权信息

Hytera为海能达通信股份有限公司（以下简称“我司”）在中华人民共和国和世界其他国家和/或地区的商标或注册商标。我司仅对自有商标及产品名称享有所有权，本手册中可能提及的其他商标和产品名称为各自所有者所有。

本手册介绍的产品中可能包括存储于内存或其他媒介中的计算机程序。我司对此等程序享有的专有权利受中华人民共和国或其他国家及相关国际法的保护。购买本产品并不意味着我司以明示或暗示方式向购买者授予有关此等电脑程序的权益。未经我司事先书面授权，任何企业、组织或个人不得对计算机程序进行任何形式的复制、更改、散发、反编译和反向工程。

免责声明

本手册在编制过程中力求内容的准确性与完整性，但对于可能出现的错误或疏漏，我司不承担任何责任。由于技术的不断发展，我司保留不予通知而更改产品设计与规格的权利。未经我司事先书面授权，不得以任何形式对本手册进行复制、修改、翻译和散发。

本手册中涉及的第三方产品和内容归第三方所有，我司对其准确性、有效性、及时性、合法性或完整性均不提供保证。

如需更多信息或对本手册有任何建议，欢迎访问我们的网站：http://www.hytera.com，或拨打我司服务热线：400-830-7020。

美国联邦通信委员会监管要求

按照美国联邦通信委员会的监管要求，终端必须符合美国联邦通信委员会射频辐射限制规定，否则不能在美国市场上销售。并要求制造商可通过在产品上张贴标签的方式，告知用户应注意的事项，提高用户的防辐射意识。

射频辐射控制及操作说明

为了使产品发挥最佳性能及确保符合上述标准中有关职业或受控环境中的辐射限制要求，发送时间不得超过额定因数的50%（最高50%的时间发射），且需遵照下列说明：

- 仅在发射（讲话）时产生射频能量辐射，接收（收听）和待机时均不会产生。
- 发射时终端与身体的距离至少保持在2.5厘米以上。

目 录

包装清单 **2**

熟悉产品 **3**

部件介绍 3

状态图标 4

LED指示灯 4

用前准备 **4**

安装天线 4

安装电池 4

安装皮带夹 4

安装音频附件 5

充电 5

查看电量 5

基本操作 **6**

呼叫 **6**

数字信道呼叫 6

模拟信道呼叫（无信令） 6

功能说明 **7**

故障处理 **9**

保养与清洁 **11**

保养 11

清洁 11

选购配件 **11**

保修范围与期限 **11**

包装清单

包装盒内含有以下物品。如有任何物品丢失或损坏，请与您所购产品的经销商联系。

物品	数量	物品	数量
主机	1	皮带夹	1
电池	1	电池盖	1
电源适配器	1	吊绳	1
天线	1	资料套件	1

备注

请检查电池槽内的主机标签及天线底部色环标签，以确保所购产品无误。

熟悉产品

部件介绍

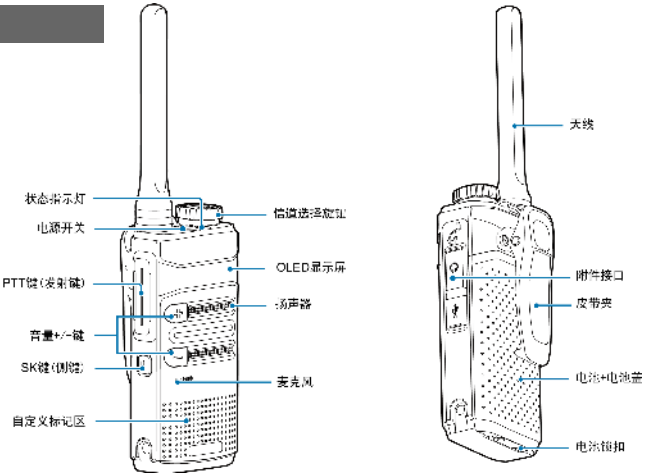

备注

为了提升操作便利性，终端提供可编程键【SK】键，可由经销商配置为功能快捷键。

状态图标

LED指示灯

指示灯状态	产品状态
绿色闪烁	正在开机
绿色常亮	正在接收
红色常亮	正在发送
橙色慢闪	正在扫描
橙色常亮	呼叫保持状态，即呼叫成功建立后，各方均处于接收状态，信道资源空闲，此时您可以按住【PTT】键讲话。

用前准备

安装天线

注意

请勿手持天线顶端甩动终端，否则会降低终端天线的工作性能和使用寿命。

1. 将天线的螺纹端插入主机顶部天线端口。
2. 沿顺时针方向拧紧天线。

安装电池

1. 将底部电池锁扣解锁，并取下电池盖。
2. 将电池前端插入主机底壳内，轻压电池底部，卡入电池。
3. 安装电池盖，并将底部电池锁扣锁上。

备注

如需卸下电池，请先关机。然后请按照“安装电池”的步骤1取下电池盖。再从电池底部向上提起电池并取出即可。

安装皮带夹

1. 用螺丝刀卸下主机上的皮带夹螺钉。

2. 将皮带夹的螺钉孔对准主机上的螺钉孔并用螺钉锁紧皮带夹。

安装音频附件

1. 打开附件接口盖。
2. 将音频附件插头对准附件接口插入。
3. 音频附件插头需按顺时针方向旋转，直至与附件接口贴紧。

充电

注意

- 请使用我司指定的充电设备充电。
- 请在充电前参阅《安全信息手册》之“严禁充电”，以获取必要的电池安全信息。

电池配主机首次使用时，可能会出现低电告警现象，请在使用终端前先关机充电。

请按如下操作步骤进行充电：

1. 将电源适配器接口插入终端的USB接口。
2. 将电源适配器插头插入电源插座。
3. 观察终端显示屏的电池电量图标可了解当前充电状态。当电池电量图标显示满格时，表示充电完成。

查看电量

如果经销商为终端设置了【电池电量提示】快捷键，则您可以按住该快捷键通过主机LED指示灯、BEEP提示音及电池电量图标查看电池剩余电量，松开该快捷键取消查看电池剩余电量。当电池电量显示 图标，表示电量不足，请尽快充电或者更换电池。

LED指示灯	BEEP提示音	电池电量图标
绿色常亮	“滴滴滴”	
橙色常亮	“滴滴”	
红色常亮	“滴”	
红色闪烁	低电提示音	

基本操作

图标	操作说明
	开机/关机：向下按【电源开关】键即可开机或关机
	增加音量：开机后，按【音量+】键可以增加音量
	减小音量：开机后，按【音量-】键可以减小音量
	开机后，旋转【信道选择】旋钮选择所需的信道

呼叫

为保证最佳接收音量，发射时请保持麦克风与嘴的距离为2.5厘米～5厘米。

数字信道呼叫

您可对当前数字信道上预设的联系人进行个呼、组呼和全呼（全呼权限需要由经销商开启），各类型呼叫的发起和接听方法相同。每个数字信道可由经销商预设一个“发射联系人”为个呼联系人、组呼联系人或全呼联系人。

呼叫类型	操作方法	
	发起呼叫	接听呼叫
个呼	在待机状态，按住【PTT】键发起呼叫。发起个呼时，OLED显示屏显示 ；组呼时，OLED显示 ；全呼时，OLED显示 。	接收到个呼时，OLED显示屏显示 ；组呼时，OLED显示 ；全呼时，OLED显示 。 您无需任何操作即可接听。在预设时间内按住【PTT】键可发起回呼。
组呼		
全呼		

模拟信道呼叫（无信令）

您可以对当前模拟信道上的所有用户发起呼叫，操作方法同数字信道呼叫。

功能说明

终端支持的功能如下表所示。个呼、组呼和模拟信道呼叫的操作方法请参考“呼叫”。其他功能需由经销商配置，【SK】键为功能快捷键，具体操作方法请咨询经销商。

分类	名称	描述
公共功能	区域	区域是一个信道组。终端支持16个区域，最多包含256个信道。
	功率级别	功率级别是当前信道的发射功率级别，可设置为高功率或者低功率。
	扫描	终端扫描到某个信道上有活动时，将停留在该信道上进行收听，从而了解相关组员当前的活动状况。
	紧急报警	紧急报警是遇到紧急情况时，您可以向同伴或者控制中心寻求帮助。 紧急报警有最高优先权。
	声控	当终端开启声控功能后，麦克风检测到的语音达到发射条件时，终端将自动发射该语音。若经销商配置了某个信道的声控功能，您无需操作，终端会自动开启该信道的声控功能。此功能需与带声控功能的耳机配合使用。
	脱网	中转台故障或超出中转台覆盖范围时，终端可以脱网通信。
	繁忙信道锁定	繁忙信道锁定是锁定正在发射的用户所在信道，防止其他用户干扰。
	超时禁发	单次发射时间超时（默认为60秒），终端将自动终止发射并且发出警告音。如需再次通话，请在预设时间后再发射。
	键盘锁	无需使用键盘时可锁定键盘以防止误操作。开启键盘锁功能后，在设定延时时间内，如果没有任何操作或终端没有收到载波，终端将自动锁定键盘。
	省电	当终端待机达到省电时间，将自动进入省电模式。

分类	名称	描述
数字功能	个呼	个呼是一对一的呼叫。
	组呼	组呼是一对多的呼叫。
	全呼	全呼是对当前数字信道上所有联系人的呼叫。
	一键呼叫	一键呼叫是通过快捷键发起个呼或组呼。
	TDMA直通模式	TDMA直通模式是把数字信道划分为两个交替的时隙，如果某一时隙被占用，终端还可以通过另一空闲时隙进行发射和接收。
模拟功能	模拟信道呼叫	模拟呼叫是在模拟信道上的呼叫。
	静噪打开	静噪打开是无论有无载波，终端始终打开扬声器。静噪打开功能开启时，终端响“沙沙”的背景噪音。
	暂态静噪打开	暂态静噪打开是终端暂时打开扬声器。您可以按下【暂态静噪打开】快捷键暂时开启静噪打开，松开该键即可退出。
	静噪级别调整	静噪级别调整是调整接收信号时所需要的信号强度。一般情况下，静噪级别越高，要求接收到的信号强度也越高。静噪级别分为常开、正常和加强，若设置为常开，终端直接打开扬声器放出背景音。
	监听	监听是辨别和收听扬声器中微弱的声音。
	扰频	扰频是终端对当前信道的语音加密后再发射，接收方解密后才能获取语音，防止同频窃听。若某个信道已开启此功能，则切换至该信道时，终端会自动开启扰频。
	亚音频/亚音数码	亚音频/亚音数码是接收的亚音频/亚音数码与发射的亚音频/亚音数码匹配时，您才可以通过扬声器收听语音。

故障处理

故障描述	原因分析	解决方法
无法开机	电池可能未正确安装	取出电池并重新装入
	电池电量可能已经耗尽	充电或更换电池
	电池触点污浊或受损而导致接触不良	清洁电池触点
接收信号时声音小、断续或无声	电池电量过低	充电或更换电池
	音量较小	通过【电源开关/音量控制】旋钮调大音量
	天线松动或安装不到位	关机后重新安装天线
	扬声器堵塞或受损	进行简单的外部清洁
无法与组内其他成员通话	所用频率或信令设置与组内其他成员不同	设置与组内其他成员相同的频率和信令
	数字、模拟信道设置不当	设置相同的数字信道或模拟信道
	距离组内其他成员太远	尽量靠近其他成员，确认位于其有效通讯范围之内

故障描述	原因分析	解决方法
信道中出现其他通话声或杂音	受到同频用户的干扰	更改为新的频点，或调整静噪级别
	未设置信令	对组内所有对讲机进行信令设置，以防止同频干扰，且必须同时更改组内所有手持终端的信令设置
噪声较大	与其他成员之间的通讯距离过远	靠近其他成员
	所处位置不佳，如受高大建筑物阻挡，或位于地下室等	移至开阔平坦地后，开机重试
	受外界环境或电磁干扰	避开可能引起干扰的设备
一直发射	启用声控功能后，将耳机【PTT/VOX】开关从“PTT”档拨到“VOX”档	重新拔插耳机
OLED显示屏无显示	OLED显示屏暂时失灵	重新开关机一次

如上述方法仍未解决您的问题，或您遇到一些其他的故障，请联系当地经销商或我司以获取更多的技术支持。

保养与清洁

为了保证终端发挥其良好性能，以及延长其使用寿命，请熟悉以下内容，以便更好地对终端进行日常保养与清洁。

保养

- 请勿用硬物穿刺或刮花终端。
- 请勿将终端存放于含有腐蚀电子电路物质的环境。
- 携带或使用终端过程中，请勿用手提天线或耳机线。
- 当不使用附件时，请盖好附件接口盖。

清洁

注意

清洁之前，请关机并取出电池。

- 请定期使用洁净干燥的无绒布或毛刷拭去终端表面及充电极片附着的粉尘。
- 终端的按键和机壳极易变脏。可用中性洗涤剂和无纺布对其进行清洁，请勿用去污剂、酒精、喷雾剂或石油制剂等化学药剂进行清洁，以避免产品表面和外壳受损。
- 清洁之后，务必保证终端彻底干燥，否则请勿使用。

选购配件

注意

请使用我司指定的配件。若擅自使用未经许可的配件，则由此所导致的一切后果，由用户自行负责。

终端主要的选购附件请咨询您当地的经销商或拨打我司服务热线400-830-7020。

保修范围与期限

我司承诺，凡我司生产的产品，自购买之日起，在正常使用、操作与维护条件下，出现材料或制造工艺方面的缺陷，可享受以下规定的保修服务。

主机	24个月
标配附件（包括电池、充电座）	12个月

Hytera
is the trademark or registered trademark of Hytera Communications Corporation Limited.
© 2018 Hytera Communications Corporation Limited. All Rights Reserved.
Address: Hytera Tower, Hi-Tech Industrial Park North, 9108# Beihuan Road, Nanshan District,
Shenzhen, People's Republic of China
Postcode: 518057
http:// www.hytera.com

Hytera
是海能达通信股份有限公司的注册商标或商标
© 2018 海能达通信股份有限公司。版权所有
地址：深圳市南山区高新区北区北环路9108号海能达大厦
邮编：518057
服务热线：400-830-7020
http://www.hytera.com

Z17714 W17431 L07157
811BD35X00000